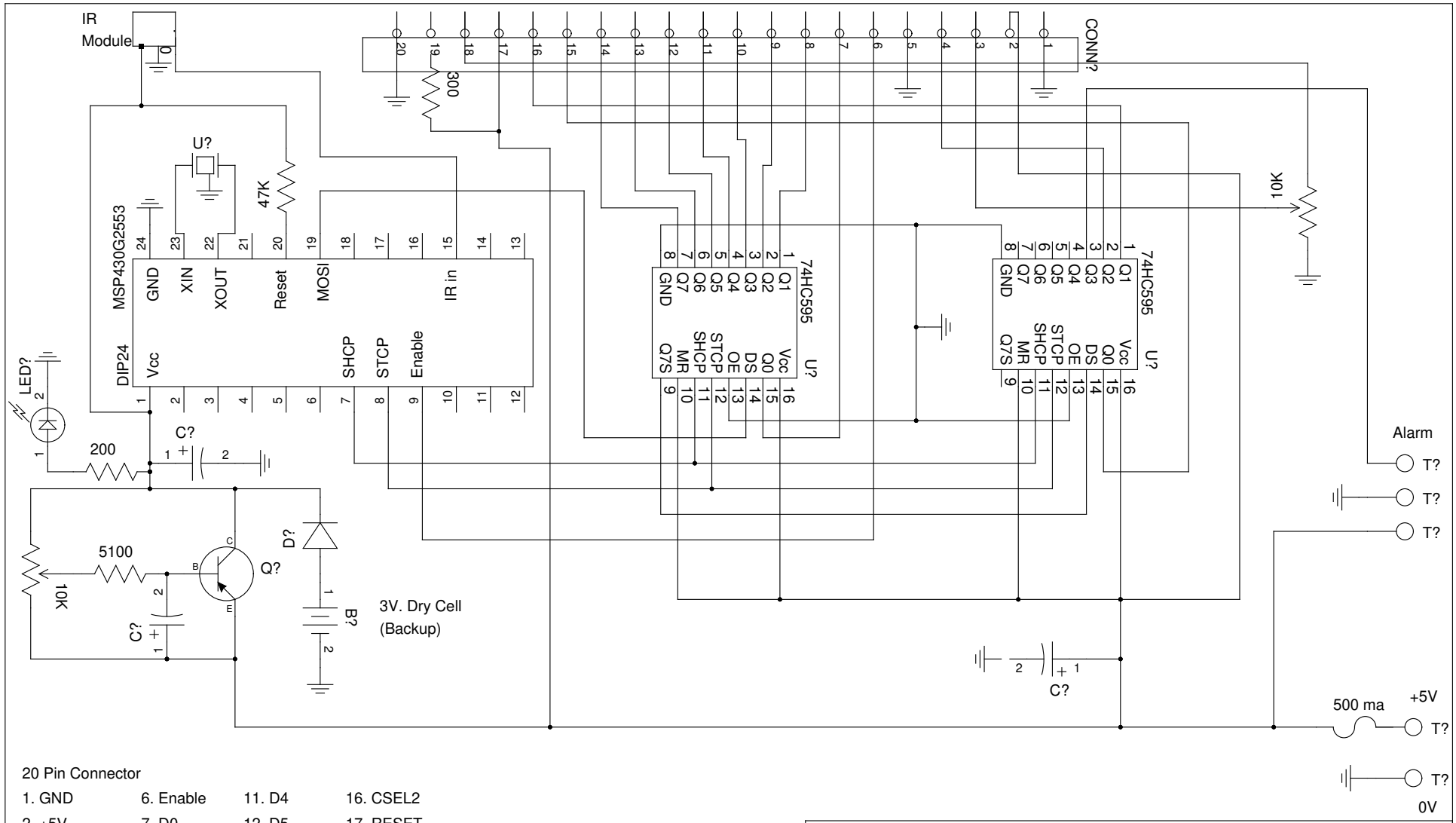

20 Pin Connector

1. GND	6. Enable	11. D4	16. CSEL2
2. +5V	7. D0	12. D5	17. RESET
3. Vo Wiper	8. D1	13. D6	18. Vout
4. RS	9. D2	14. D7	19. 300 Ohm Resistor to +5V.
5. R/W	10. D3	15. CSEL1	20. GND

TITLE	KS0108 MSP430G2553 Clock		
FILE:		REVISION:	February 9,2013
PAGE	1 OF 1	DRAWN BY:	Gregory Wright